sauermann®

USER MANUAL

Si-PM3

DIGITAL DIFFERENTIAL PRESSURE MANOMETER

www.sauermanngroup.com

CE

1 - Instrument description

The Sauermann Si-PM3 is a digital differential pressure manometer measuring instrument.

In addition to the measurement of pressure, the airflow and air velocity can be calculated.

- **A - Pressure hose**
- **B + Pressure hose**
- **C LCD screen**
- **D On/Off & backlight button**
- **E Hold/Min/Max/Live value button**
- **F Clear tubes**

2 - Safety and environment

About this document

Please read this document and familiarize yourself with the product before putting it to use. Keep this document on hand so that you can refer to it when necessary. Pass this documentation on to any subsequent users of the product.

Avoid personal injury/damage to equipment

- This device has been developed for pressure measurement and for an indoor use. Please always use the device in accordance with its intended use and within parameters described in the technical features in order not to compromise the protection ensured by the device.
- Only the accessories provided with the device or available as an option must be used.
- Never store the product together with solvents, acids or other aggressive substances.
- Only carry out maintenance and repair work that is described in the documentation. Follow the detailed steps when doing so. Use only original spare parts from Sauermann.
- If the device falls or in case of similar inconveniences, or if an irregular malfunction appears, please do not use the device and bring it back to your distributor to ensure your own safety.
- The device must not be used in ATEX zones according to applicable standards.
- Do not use the device next to explosive gases, vapor or dust.
- The device does not contain any internal part repairable by the user. Do not open the instrument.
- This device can pose a risk for wearers of pacemakers. Respect a distance of at least 10 cm (4”) between the device and the wearer.
- Observe safety distances to products that can be damaged by the magnetic field (e.g. monitors, computers, credit cards).
- Do not authorise pressures beyond the device limits. Please refer to the technical features described in this user manual.

Exclusions and restrictions of liability

The application operation is under the exclusive customer or user entity responsibility, who acknowledges using this system at his/her own risks. The customer or user entity explicitly exclude Sauermann, and every other company through which the it could have been sold of any kind of responsibility or warranty regarding any direct, indirect, accidental, consecutive or non-consecutive damage that could have been subjected, for some or all, by partial or total non-respect, voluntary or involuntary, of recommendations, conditions and prerequisites indicated hereafter.

Symbols used

For your safety and in order to avoid any damage of the device, please follow the procedure described in this user manual and read carefully the notes preceded by the following symbol:

The following symbol will also be used in this user manual, please read carefully the information notes indicated after this symbol:

The following symbol will also be used in this user manual, please read carefully the information notes indicated after this symbol:

Protecting the environment

Send back the device at the end of it's life cycle to a waste collection centre for electrical and electronic components (according to local regulations), or send it back to your distributor to ensure the device is properly disposed with respect to the environment.

3 - Standard

This equipment has been tested and found to comply with the limits for a Class B digital device, pursuant to part 15 of the FCC Rules. These limits are designed to provide reasonable protection against harmful interference in a residential installation. This equipment generates, uses and can radiate radio frequency energy and, if not installed and used in accordance with the instructions, may cause harmful interference to radio communications. However, there is no guarantee that interference will not occur in a particular installation. If this equipment does cause harmful interference to radio or television reception, which can be determined by turning the equipment off and on, the user is encouraged to try to correct the interference by one or more of the following measures:

- Reorient or relocate the receiving antenna.
- Increase the separation between the equipment and the receiver.
- Connect the equipment into an outlet on a circuit different from that to which the receiver is connected.
- Consult the dealer or an experienced radio/TV technician for help.

Changes or modifications not expressly approved by Sauermann could voice the user's authority to operate the equipment.

This device complies with part 15 of the FCC Rules. Operation is subject to the following two conditions:

1. This device may not cause interference, and
2. This device must accept any interference received, including interference that may cause undesired operation.

© 2020 Sauermann. All rights reserved. Sauermann & Si-HVACR Measurement MobileApp are the exclusive property of Sauermann. Non contractual document. The products functionalities and visual appearances can be modified without prior notice. Smartphone or tablet are not supplied with Sauermann products.

4 - Technical specifications

Parameters	Measuring units	Accuracy*	Measuring range	Resolution
Pressure	hPa, mbar, Pa, mmH_2O, inH_2O, inHg, psi	±(1.5% of value +0.2 hPa) ±(1.5% of value +0.09 inH_2O)	From -150 to +150 hPa From -60 to 60 inH_20	0.01 hPa / 0.001 psi / 0.01 inH_20 / 1 Pa / 0.01 mbar / 0.1 mmH_2O / 0.001 inHg
Airflow**	m^3/h, m^3/s, cmm, cfm	-	From 0 to 9999 m^3/h	1 m^3/h / 0.001 m^3/s / 0.01 m^3/min / 0.1 ft^3/min
Air velocity***	m/s, fpm	-	From 2 to 80 m/s From 394 to 15748 fpm	0.1 m/s 1 fpm

Air velocity displayed on the instrument is calculated at fixed conditions: L Pitot tube with a deprimogen coefficient of 1.0015, at 20°C (68°F) and 1013.25 hPa (29.92 inHg). When the app is used to display air velocity, these parameters can be modified.

*All the accuracies indicated in this technical datasheet were stated in laboratory conditions, and can be guaranteed for measurements carried out in the same conditions, or carried out with calibration compensation.

**Calculated values, only available on the app / ***Calculated values

5 - General features

Measuring element	Piezoresistive sensor
Admissible overpressure	750 mbar (301 inH_2O)
Connector	Stepped connectors from Ø 5.1 to 6.2 mm
Display	Integrated 2-line LCD 7 segment monochrome display with backlight
Housing	ABS-PC and TPE, IP40
Keypad	1 ON/OFF & Backlight key 1 Hold/Min/Max/Live & Autozero key
Standards & Directives	2011/65/EU RoHS II; 2012/19/EU WEEE; 2014/53/EU RED
Power supply	3 alkaline batteries LR03 AAA 1.5 V
Supply voltage	4.5 V ⎓
Consumption	135 mW
Battery life	170 hours* (without backlight and without wireless communication)
Wireless communication	Range frequency from 2402 MHz to 2480 MHz with a transmit power of 0 dBm. Range up to 15 m (98 ft), depending on smartphone radio strength. Minimum required versions: Android 5.0, iOS 12.4, BLE 4.0
Ambiance	Air and neutral gases
Operating conditions	From 0 to 50°C (32 to 122°F) In non condensing conditions Altitude: from 0 to 2000 m (6561')
Storage temperature	From -20 to +70°C (-4 to 158°F)**
Auto shut-off	10 minutes (can be deactivated)
Weight (with batteries)	200 g (7 oz)

*Battery life given at 20°C (68°F) with alkaline batteries

**If the instrument is stored outside the operating temperature (for example in a van, a warehouse, etc.), please wait for 10 minutes in its operating temperature before starting and using it.

6 - Operating principle

Calculation of saturation pressure

This parameter must be calculated for air velocity calculation with the Si-PM3 differential pressure manometer instrument.

Psat: Saturation pressure (unit: Pa)
H: Relative Humidity (unit: %RH)
T: Temperature (unit: Kelvin K)

$$Psat = \frac{H}{100} * e^{\frac{-6096.9385}{T} + 21.2409642 - 0.02711193 * T + 0.00001673952 * T^2 + 2.433502 * \ln(T)}$$

Calculation of air density

This parameter must be calculated for air velocity calculation with the Si-PM3 differential pressure manometer instrument.

ρ: Air density (unit: kg/m³)
Patm: Atmospheric pressure (unit: Pa)
T: Temperature (unit : Kelvin K)
Psat: Saturation pressure (unit: Pa)

$$\rho = 1.293 * \frac{273.15}{T} * \frac{Patm}{101325} * \frac{0.62198 * (1 + (0.62198 * \frac{Psat}{Patm - Psat}))}{0.62198 + (0.62198 * \frac{Psat}{Patm - Psat})}$$

7 - Dimensions

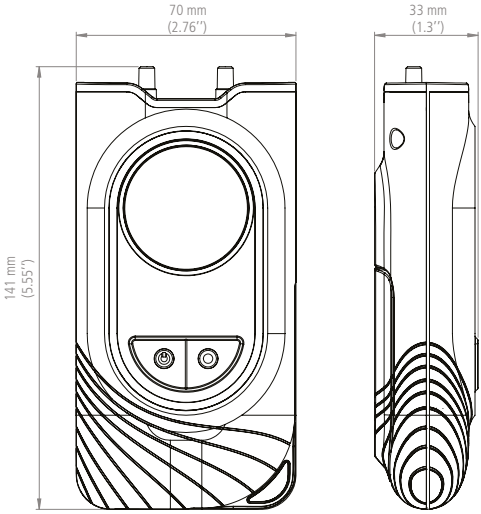

8 - Accessories

Name	Reference
Softcase	SIACCSC

9 - Operating instructions

Insert the batteries

- Unscrew the batteries compartment cover at the back of the device and remove the cover.
- Put the 3 alkaline AAA LR03 1.5V batteries supplied with the instrument.
- Carefully respect the polarity.
- To close the batteries compartment, push the batteries cover back on, starting with the upper part.
- Screw the batteries compartment cover.

Turn on the instrument

- Press & hold the ON/OFF key.

Perform an autozero

- Press & hold the HOLD key.
- Connect a pressure hose on the "+" of the device and on the "+" of the installation.
- Connect the other pressure hose on the "-" of the device and on the "-" of the installation.
- The device displays the pressure measurement.

Select the unit

- With the device turned on.
- Long press simultaneously ON/OFF & HOLD keys to switch to the required measurement unit : Pa, hPa, mbar, inH_2O, mmH_2O, inHg, psi, m/s, fpm

Activate/deactivate the wireless communication

- With the device turned on.
- Press simultaneously ON/OFF & HOLD keys to activate or deactivate the wireless communicaiton.
- When activated, the wireless communicaion icon flashes on the instrument screen.
- The icon becomes fixed when the instrument is paired to a tablet or smartphone.

Activate/deactivate the Backlight

- With the device turned on.
- Press ON/OFF key to activate or deactivate the backlight.

Activate/deactivate the Auto shut-off

- The device has an automatic shut-off set to 10 minutes.
- When the device starts, all the segments are displayed. During this time, press & hold the ON/OFF key to enter "Power down menu".
- Press HOLD to activate/deactivate the auto shut-off.
- Press & hold the ON/OFF key to exit the "Power down menu".

Display Hold/Min/Max/Live values

- With the device turned on and measured values are displayed.
- Press HOLD key to successively:
  - Freeze the display of measurement values
  - Display the minimum measured values
  - Display the maximum measured values
  - Restore the live display

The autozero must be performed before to connect the hoses to the instrument and to the installation.

Key operation

KEY	SHORT PRESS	LONG PRESS (3 seconds)
ON/OFF	Backlight ON/OFF	Device ON/OFF
HOLD	Hold / Min / Max / Live value	Autozero
ON/OFF and HOLD	Wireless communication ON/OFF	Pa / hPa/ mbar / inH_2O / mmH_2O / inHg / psi / m/s / fpm

Use with a pitot tube

The **Pitot tube** is introduced perpendicularly to the air flow in the pipe by pre-determined points by the user.
The antenna composed of an ellipsoidal nose (bow) maintained in parallel and in front of the flow to control.
The Tp total pressure (+) is picked up by the bow and is connected to the + sign of the manometer.
The Sp static pressure (-) picked up by the small holes located around the antenna is connected to the – sign of the manometer.
The difference between these two pressures is the pressure indicated on the Si-HVACR Measurement MobileApp and is equal to the dynamic pressure Dp = Tp-Sp.

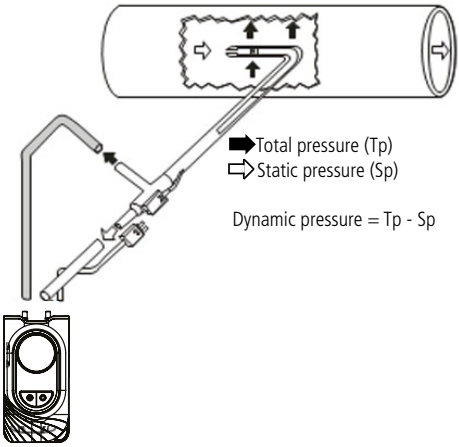

10 - Maintenance

Change batteries

- With the device turned off.
- Unscrew the battery compartment at the back of the device and remove the cover.
- Remove used batteries and insert new batteries (3 alkaline batteries AAA LR03 1.5 V) respecting the polarity.
- To close the battery compartment, push the battery cover back on starting with the upper part.
- Screw the battery compartment cover.

Clean the instrument

- Clean the housing with a damp cloth (soap suds) if it gets dirty.
- Do not use aggressive cleaning agents or solvents.

11 - Warranty

Instruments have 2-year guarantee for any manufacturing defect.

12 - Mobile App

The **Si-HVACR Measurement MobileApp** allows to view and record measurements in real-time.

Main features:

- Easily view different parameters
- Browse saved measurements history and data graphs (average, min & max values, etc.)
- Create reports (PDF, CSV or XML format) and add up to four (4) photos

Download the **Si-HVACR Measurement MobileApp**

Download the MobileApp **user manual**

Sauermann Industrie
ZA Bernard Moulinet
24700 Montpon
France
T. +33 (0)5 53 80 85 00
services@sauermanngroup.com

Sauermann Italia SA
Via Golini 61/10
40024 Castel S.Pietro Terme (BO)
T. (+39)-051-6951033
F. (+39)-051-942254
info.italy@sauermanngroup.com

Sauermann NA
140 Fell Court, Ste. 302
Hauppauge, New York 11788
T. (+1) 631-234-7600
F. (+1) 631-234-7605
info.usa@sauermanngroup.com

Sauermann Ibérica
C/Albert Einstein 33.
Planta 3. P. I. Santa Margarida II-
08223 Terrassa (Spain)
T. +34 931 016 975
info.spain@sauermanngroup.com

Sauermann GmbH
Leibnizstraße 6
D – 74211 Leingarten
T. +49 (0)7131/399990
F. +49 (0)7131/399992
info.germany@sauermanngroup.com

Sauermann Australia
Unit 4/14 Rodborough Road,
Frenchs Forest, NSW 2086
T. (+612) 8880 4631

Sauermann UK
Units 7-9, Trident Business Park
Amy Johnson Way
Blackpool - FY4 2RP
T. +44 (0) 870 950 6378
F. +44 (0) 870 950 6379
info.uk@sauermanngroup.com

NT – Si-PM3 – EN – 08/01/2021 – Non-contractual document – We reserve the right to modify the characteristics of our products without prior notice.

BE CAREFUL! Material damages can happen, so please apply the precautionary measures indicated.

Once returned, required waste collection will be assured in the respect of the environment in accordance to guidelines relating to WEEE.