sauermann®

DATA SHEET

KISTOCK DATALOGGER KCC 320 / KPA 320

Temperature / Humidity / Atmospheric pressure / CO2

Features

- Software for configuration and data visualisation
- freely downloadable
- Software for configuration and data processing
- available in option
- Safety lock wall mount with inviolability system
- Storage capacity of 2 000 000 points
- Fast data downloading: 18 000 points/s
- Up to 4 recordable parameters simultaneously
- 2 configurable setpoint alarms for each channel
- 2 lines LCD screen
- Bluetooth® communication for smartphones and tablets
- (Android and IOS)
- Magnetic mounting

References

Reference	Display	Internal sensor	External sensor	Parameters
KCC 320	Oui	4: Temperature, humidity, atmospheric pressure, CO_2	-	Temperature, humidity, atmospheric pressure, CO_2
KPA 320	Oui	3: Temperature, humidity, atmospheric pressure	-	Temperature, humidity, atmospheric pressure

Gereral features

Display	2 lines LCD screen Dimensions of screen: 49.5 x 45 mm 2 indication LEDs (red and green
PC communication	1 micro-USB input
Power supply	2x lithium AA 3.6 V batteries
Protection	IP40
Material	Compatible with food industry environment ABS housing
Dimensions	110.2 x 79 x 35.4 mm
Weight (with batteries)	KCC 320: 206 g KPA: 200 g
Environmental conditions of use	Air and neutral gases Hygrometry: in non condensing condition Maximum altitude: 2000 m
Warranty	1 year

Technical specifications

	KCC 320	KPA 320
Units displayed	°C, °F, %HR, hPa, ppm	°C, °F, %HR, hPa
Resolution	0.1 °C, 0.1 °F, 1 ppm, 0.1 %HR, 1 hPa	0.1 °C, 0.1 °F, 0.1 %HR, 1 hPa
External input	Female micro-USB connector	
Input for probe	-	
Overpressure tolerated	-	1260 hPa
Internal sensor	Humidity, temperature, atmospheric pressure, CO_2	Humidity, temperature, atmospheric pressure
Surpression admissible	-	1260 hPa
Type of sensor	Temperature and humidity: capacitive Atmospheric pressure: piezoresistive CO2: NDIR	Temperature and humidity: capacitive Atmospheric pressure: piezoresistive
Measuring range	Temperature: from -20 to 70°C Humidity: from 0 to 100%RH Atmospheric pressure: from 800 to 1100 hPa CO2: from 0 to 5000 ppm	Temperature: from -20 to 70°C Humidity: from 5 to 95%RH Atmospheric pressure: from 800 to 1100 hPa
Accuracies[4]	Temperature: ±0.4°C from 0 to 50°C ±0.8°C below 0°C or above 50°C Humidity**: ±2%RH from 5 to 95%, 15 to 25°C Atm. pressure: ±3 hPa CO2: ±50 ppm ±3% of the reading	Temperature: ±0.4°C from 0 to 50°C ±0.8°C below 0°C or above 50°C Humidity**: ±2%RH from 5 to 95%, 15 to 25°C Atm. pressure: ±3 hPa
Setpoints alarm	2 setpoints alarms on each channel	
Frequency of measurement	From 1 minute to 24 hours (15 s in on-line mode)	From 1 second to 24 hours
Operating temperature*	From 0 to +50°C	
Storage temperature	From -40 to +85°C	
Battery life	3 years***	7 years***
European directives	2011/65/UE RoHS II ; 2012/19/UE DEEE ; 2014/30/UE CEM ; 2014/35/UE	

* All accuracies indicated in this document were stated in laboratory conditions and can be guaranteed for measurement carried out in the same conditions, or carried out with calibration compensation.
** Factory calibration uncertainty: ±0.88%RH. Temperature dependence: ±0.04 x (T-20) %RH (if T<15°C or T>25°C)
*** On the basis of 1 measurement each 15 minutes at 25°C.

Recorder function

Five recording modes

KISTOCK can record in 5 different ways:

- **"Immediate"** mode records values according to a predefined interval.
- **"Minimum"**, **"Maximum"** and **"Average"** record automatically the calculation of minimum, maximum or average of measured values during an interval of recording.
  "Monitoring" mode allows to get an accurate history report during error events to help troubleshooting, without stopping the measurement logging. To proceed this way, you just have to define :
  - a record interval to be used whilst the readings are beyond the setpoints
  - a record interval for the values measured during each reading beyond the setpoints
- Furthermore, you can also let your KISTOCK record non-stop (**"loop"** recording option).

Four types of dataset start:

Once your recording mode has been set, you can launch your dataset:

- With a delayed start (with predefined date and time)
- With the software
- With push-button
- With **"Online"** option. In this case, your datasets are directly sent, saved and displayed on your PC in real time.

Six types of dataset stop

You can stop your dataset:

- According to a date and time (if it was started the same way)
- According to a period
- According to a predefined number of recording points
- Once the storage capacity is full
- With **"Stop"** option of the software
- By holding **"OK"** key during 5 seconds, if this function has been previously activated by the software

Dimensions (mm)

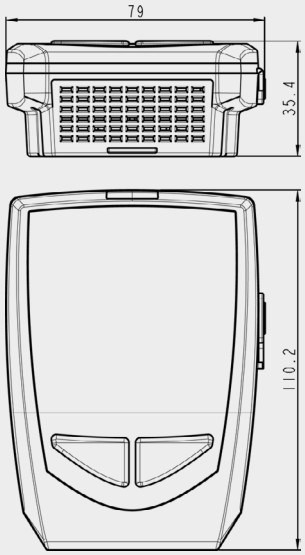

PC connection

Display

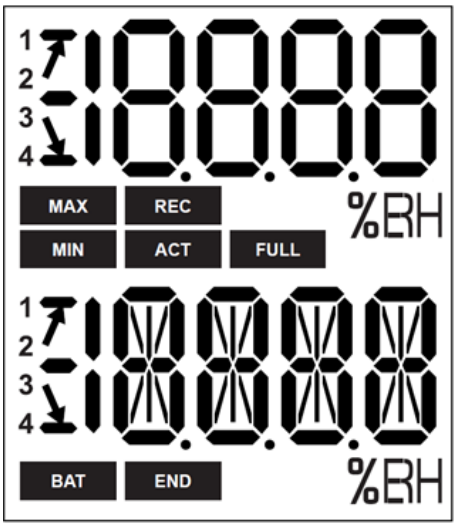

END DATASET is finished.

REC Indicates that one value is being recorded.
It flashes: the DATASET did not start already.

FULL Flashing slowly: DATASET is between 80 and 90 % of the storage capacity.
Flashing quickly: DATASET is between 90 and 100 % of the storage capacity.
Constant: storage capacity full.

BAT Constant: indicates that the batteries have to be replaced.

1 2 / 3 4 Indicates the channel number which is measuring.

ACT Screen actualisation of measured values.

MIN / MAX The displayed values are the maximum/minimum values recorded for the channels displayed.

Indication of the direction of exceeding the threshold in the recorded measurement

°C: Temperature in °Celsius.
°F: Temperature in °Fahrenheit
%HR: Relative humidity (KH 220)

Mounting

The KISTOCK class 320 have a magnetic mounting, so you can fix it easily.

Magnetic mounting

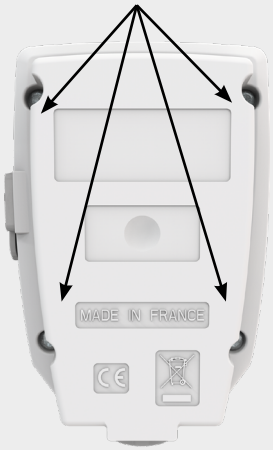

Replace the battery

With 4 years* of battery life, the KISTOCK devices guarantee long-term measurements.

To replace the battery:
- Unscrew the 4 screws on the back side of the device with a screwdriver.
- Remove the back side and the old batteries.
- Insert the new battery and respect the polarity.
- Replace the back side and the 4 screws

* On the basis of 1 measurement each 15 minutes at 25°C.

Safety lock wall mount with padlock

The system allows to secure your KISTOCK datalogger on sensitive sites.

Mount the safety lock support on the required place.

1. Present the KISTOCK datalogger on the support starting with the inferior part
2. Clip the KISTOCK on the support by falling back the superior part
3. Insert the padlock to ensure the safety lock function

The padlock can be replaced by a fail-safe sealed.

The datalogger can be placed on the screw-mount without the safety lock function.

- To remove the datalogger from the support, proceed on reverse order.

Dimensions of the wall mount (mm)

Front view

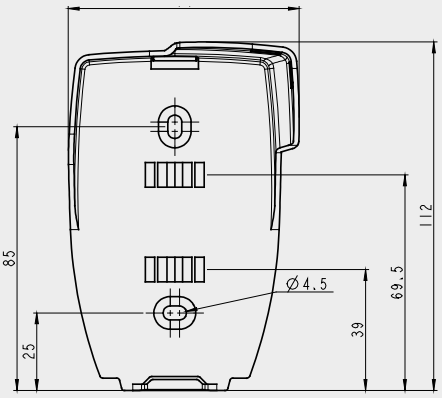

Side view

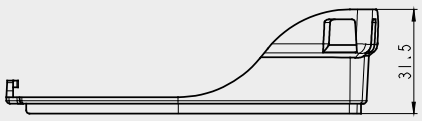

Sofwtare

Kilog Lite: free software to download on sauermanngroup.com
Allows the data download (graphics and points statement) and the datalogger configuration.

Configuration and data processing software
KILOG software allows to configure, save and process your data in a very simple way.
- **Software only:** Ref. KILOG-3-N
- **Complete set:** software + 1 USB cable, Ref. KIC-3-N

Accessorries

Accessories	Reference
1 AA lithium 3.6 V battery (⚠ 2 batteries are required for class 320 dataloggers)	KBL-AA
Safety lock wall mount with padlock	KAV-220
Wired extension for class 220 KISTOCK probes In polyurethane, 5 m length with male and female mini-DIN connectors Note: several extensions can be wired in order to obtain up to 25 m cable length	KRB-220
Data collector Collects up to 20 000 000 points from one or several KISTOCK directly on-site. Results restitution on PC of realised datasets	KNT-320
USB micro-USB cable which allows to plug your KISTOCK datalogger to your PC	KAV-320
Neck size hand strap	CK-50

Only the accessories supplied with the device must be used.

Maintenance

Please avoid any aggressive solvent.
Please protect the device and probes from any cleaning produce containing formalin, that may be used for cleaning rooms and ducts.

Calibration

A calibration certificate is available as option in paper format.
We recommend to carry out a yearly checking.

Guarantee period

KISTOCK dataloggers have 1-year guarantee for any manufacturing defect (return to our After-sales service required).

Precautions for use

Please always use the device in accordance with its intended use and within parameters described in the technical features in order not to compromise the protection ensured by the device.

⚠ BE CAREFUL! Material damages can happen, so please apply the precautionary measures indicated.

Once returned toSauermann, required waste collection will be assured in the respect of the environment in accordance to guidelines relating to WEEE.

www.sauermanngroup.com

FT – kistock_class320_KCC-KPA-320_EN – 26/05/20 - Non-contractual document – We reserve the right to modify the characteristics of our products without prior notice.